SPECIFICATION DRAWING

DAQU CONFIGURATION

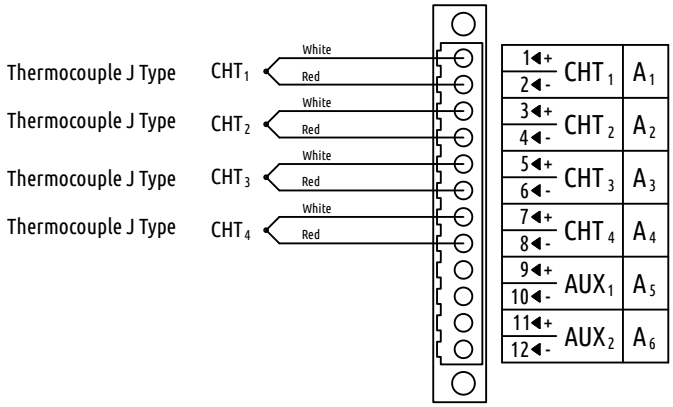

OPTION	SELECTION/SETTING
CHANNEL	Any A, but A13
FUNCTION	CHT1, CHT2, ...
SENSOR	J type
ISOLATED	NO
REPORT TIME FREQUENCY	0.5 – 1.0 s 1Hz - 2Hz
FILTER	2000ms or 2s

PART PHOTO/DRAWING

Type		US
J	+	white
	-	red

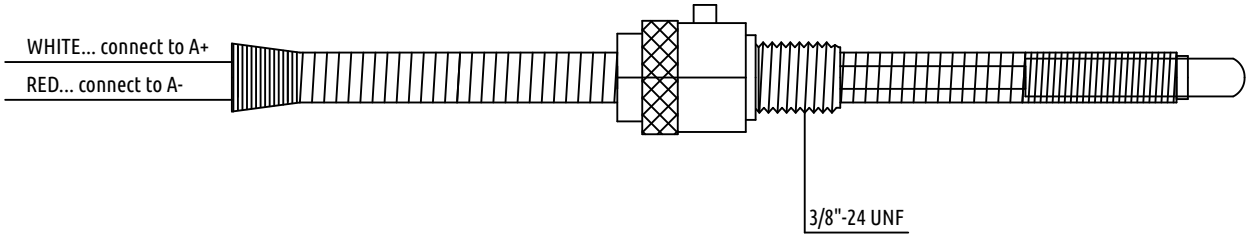

SPECIFICATION

WEIGHT	40g
TEMPERATURE RANGE	-40 – 750 °C/ -40 –1382°F
TYPE	Thermocouple J-Type
CABLE LENGTH	700mm

NOTES

-Do not bend! Warranty void when curved.
-Make sure to use a J-Type extension cable if an extension is needed!
-You may cut cable to length.

REV	DATE	DESCRIPTION	DR
A	10.3.2022	Initial release.	ŽP

PART NAME: S-CBLY

You can find this product under part numbers:
PRODUCER PART No: DYNON 100404-000

FILE NAME: ~/ownCloud/Sensors/S-CBLY.dxf

TITLE: CHT Temperature Sensor, Bayonet J Type, 3/8"-24 UNF

DATE: 10.3.2022 | SCALE: N/A | SHEET: 1 of 1
DRAW BY: ŽP | CHECK BY: GT | REV: A

KANARDIA d.o.o.
Lopata 24a
3000 Celje
Slovenia