INDU ALTIMETER
Manual

September 2020

Revision 1.7

Contact Information

Publisher and producer:
Kanardia d.o.o.
Lopata 24a
SI-3000
Slovenia

Tel: +386 40 190 951
Email: info@kanardia.eu

A lot of useful and recent information can be also found on the Internet. See `http://www.kanardia.eu` for more details.

Copyright

Credits

This document was written using TeX Live (LaTeX) based document creation system using Kile running on Linux operating system. Most

of the figures were drawn using Open Office Draw, Inkscape and QCad applications. Photos and scanned material was processed using Gimp. All document sources are freely available on request under the licence mentioned above and can be obtained by email. Please send requests to info@kanardia.eu.

WEEE Statement

Disposal of Waste Electrical and Electronic Equipment. This electrical item cannot be disposed of in normal waste. Check with your local authority for kerbside collection, or recycle them at a recycling centre.

EU Battery Directive

This statement applies only for Altimeter which is equipped with integrated backup battery.
This product contains a battery that is used to provide power when the primary source of power is unavailable and is designed to last the life of the product. Any attempt to service or replace this battery should be preformed by a qualified service tehnician.

Revision History

The following table shows the revision history of this document.

Rev.	Date	Description
1.0	Feb 2015	Initial release
1.1	Oct 2015	Altitude model is extended up to 20000 m.
1.2	Dec 2015	Procedure for QNH toggle and IAS auto zero.
1.3	Mar 2016	Procedure for Illumination wheel activation.
1.4	Jul 2017	Backup battery option.
1.5	Aug 2018	Illumination with push button models.
1.6	Jul 2020	Instrument pictures update.
1.7	Sep 2020	A section for the slave instruments was added.

Contents

1 Introduction

First of all, we would like to thank you for purchasing our device. Indu Altimeter is an electronic device, which mimics classical altimeter construction and combines it with the state of the art electronics. This results in the best of both worlds; a perfect and intuitive analogue reading combined with high precision of modern electronics.

This manual describes the technical description of the unit, installation and operation.

CAUTION: Indu Altimeter is not TSO approved as a flight instrument.

1.1 General Description

Indu Altimeter is an electromechanical device. It consist of high precision electronic barometric sensor, which provides static pressure information in digital form. The electronics reads the sensor and drives two coaxial stepper motors turning one needle each. The pressure information is also shown on a colour LCD display. A rotating push knob is used to adjust the barometricoffset (aka QNH value) and to adjust LCD display brightness[1]. When connected to a CAN bus Indu Altimeter outputs pressure information. An optional dim knob can be connected to the device and it is used to adjust the brightness of the screen.

80 mm's display is divided linearly in 360° scale. The long pointer is working in 1000 m (feet) per revolution with the 20 m markings (20

[1] Older models do not have push knob and a separate external knob is needed to adjust the brightness.

feet). The short pointer is working in 10000 m (feet) per revolution with 200 m markings (200 feet).

57 mm has a single pointer and a scale with 500 m (feet) markings.

Optionally, the 80 mm Indu Altimeter can be equipped with integrated backup battery.

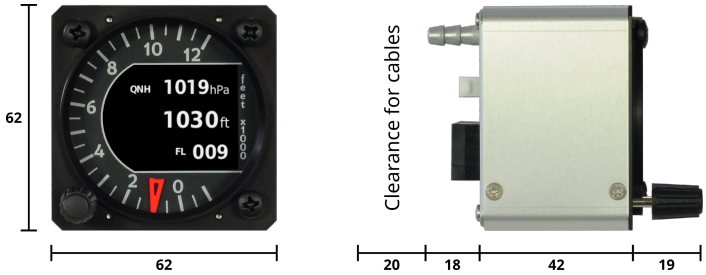

(a) 57 mm

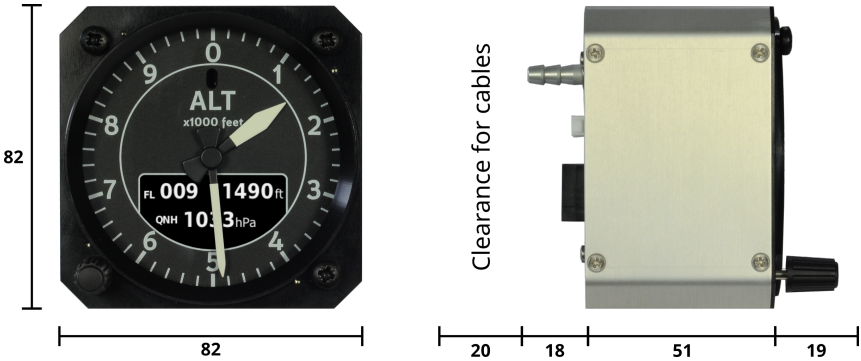

(b) 80 mm

Figure 1: Front and side view with its principal dimensions.

1.2 Technical Specification

Table 1 shows some basic technical specification of Indu Altimeter.

When the instrument is equipped with a backup battery, some specifications from the table 1 are different and correct specifications are listed in table 2 on page 9.

Description	Value
Altitude range	-500 ∼ 16000 m, (-1500 ∼ 50000 ft)
Sensor calibration	standard: -500 ∼ 6000 m extended: -500 ∼ 16000 m
Weight	57 mm: 180 g
	80 mm: 240 g
Size	57 mm: 62 x 62 x 45 (64 with connectors) mm
	80 mm: 82 x 82 x 55 (74 with connectors) mm
Operational voltage	6 ∼ 32 V
Power consumption	1.44 W
Current	120 mA at 12 V 60 mA at 24 V
Operating temperature	-20 ∼ +60 °C
Storage temperature	-30 ∼ +85 °C
Humidity	30 ∼ 90 %, non condensing
Barometric sensor	24 bit, 10 ∼ 1200 hPa, 20 cm resolution
QNH range	590 ∼ 1080 hPa, (17.42 ∼ 31.89 inHg)
Internal logger storage	more than 50 h, 1 s interval
Communication	CAN bus, 29 bit header, 500 kbit, Kanardia protocol

Table 1: Basic technical specifications.

Description	Value
Weight	305 g
Power consumption	3.84 W (when charging)
Current	320 mA at 12 V(when charging) 160 mA at 24 V(when charging)
Operating temperature	-10 ∼ +50 °C
Storage temperature	-30 ∼ +60 °C
Backup battery	Lithium iron phosphate (3.3 V)
Charging time from 0 to 100 %	2 h 30 min
Backup time	1 h 30 min (Altimeter only)
Backup time	40 min (150 mA load on CAN bus)
Max backup power output	150 mA at 12 V(to CAN bus)

Table 2: Technical specifications for Indu Altimeter with backup battery. For the rest of the specifications see Table 1.

1.3 Options

Indu Altimeter comes in a few variants regarding scale and backup battery. LCD display can have options, too.

1.3.1 Scale Options

The instrument can be delivered with two different scales. One scale is in feet and the other scale is in meters.

The scale must be specified at the time of order.

The QNH (baro-correction) units are also optional. You can choose between:

- hPa in the range of (590 – 1080) with one hPa step.
- inHg in the range of (17.42 – 31.89) with 0.01 inHg step.

Baro correction units can be changed by user. Please refer to section 3.3 on page 18.

1.3.2 Display

In standard configuration, LCD display shows three parameters. See the front page photo.

- Flight level is shown on top left corner,
- altitude is shown on top right and
- QNH value is shown on bottom.

In the case of backup battery, battery status is shown in far top right corner.

If you want a different LCD display layout, you can configure it yourself with our Customizer desktop application. This option requires Kanardia's Blu device for transfering the configuration from your android device to your Indu Altimeter. Please read our *Customizer Manual* for more information.

1.3.3 Backup Battery Option

Optionally, Indu Altimeter can be equipped with integrated backup battery. If the main power is switched off, the instrument obtains power from internal battery for a limited time. In addition, the backup battery in Indu Altimeter can supply power for one low power external device, like Indu Airspeed Indicator.

The backup battery option must be specified at the time of order. You can't upgrade the instrument with this option without sending it back to factory.

2 Installation

Indu Altimeter requires a standard size 57/80 mm hole in the instrument panel. The position of the hole must ensure good access to the instrument for the QNH adjustments and it must be always visible from the pilot's perspective.

2.1 Mounting & Dimensions

The mounting screw holes are located on a circle of 66.5/89 mm diameter. The instrument is mounted using three screws type M4. To prevent internal stresses, please make sure that the instrument panel is flat.

Remove the mounting screws from the instrument and then remove the knob. Use finger nail or sharp knife to remove the cap from the knob, but be careful not to cut the cup away. Once the cap is removed, use flat screwdriver and loosen the screw. Slide the knob from its axle. Figure 2 shows an example of the knob with its cap removed.

Figure 2: Photo of the knob with its cap removed.

It is highly recommended that the instrument panel is mounted using rubber shocks, which reduce the vibrations. Figure 3 illustrates the mounting hole.

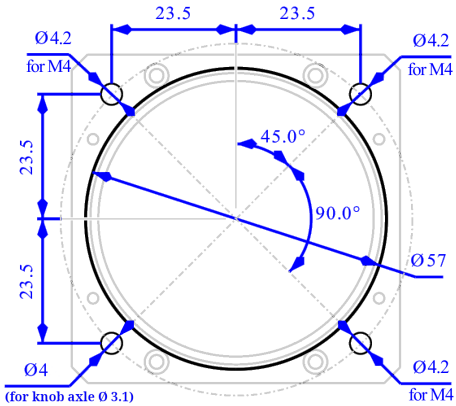

(a) 57 mm

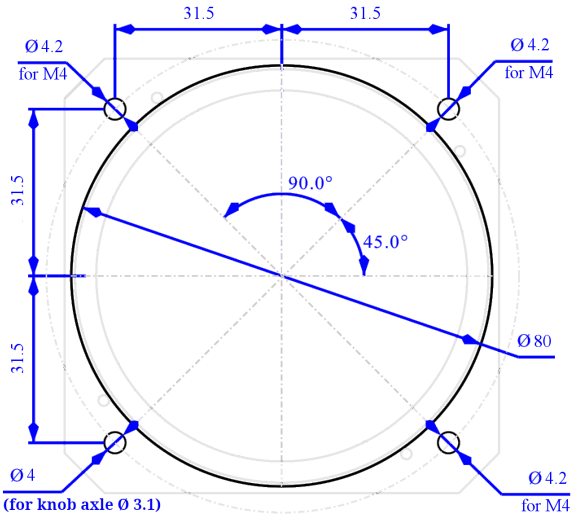

(b) 80 mm

Figure 3: Instrument panel cutout and mounting hole. Note: Figure is not in scale.

2.2 Connections

Figures 4 and 5 illustrate all connections at the backside of the instruments.

Figure 4: Back view of the 57 mm instrument with connections.

(a) Standard 80 mm model.

(b) 80 mm model with backup.

Figure 5: Back view of the 80 mm instrument with connections.

2.2.1 Static Pressure - `Pst`

Indu Altimeter must be connected to the static pressure source. Static pressure source is usually obtained from pressure sources located on the fuselage side surfaces or from the static port on the pitot tube.

Locate the existing tube, cut it at an appropriate place and insert a T junction. Install a new tube from junction to the instrument.

It is highly recommended to keep the static tubing as short as possible. The tubing must avoid sharp bends and twists. The tubing must be airtight. Water must not be allowed to enter the tubing.

It is strongly recommended to label each tube before connecting to Indu Altimeter. This will help a lot if you ever have to remove and re-install the instrument.

2.2.2 CAN Bus - `CAN`

Connection to the CAN bus is optional and is not required for the normal operation.

Use standard RJ45 ethernet cable to connect it with other Kanardia equipment.

When connected to the bus, Indu Altimeter will transmit altitude, QNH and vario to other units connected to the bus. At the same time it will serve as a data logger - it will log most of relevant information provided on the bus.

Please note that CAN bus must be terminated. Typically, this means that one of the connecting instruments must have a terminator plug installed.

In addition, Indu Altimeter also provides limited power (about 1 A at 12 V) for devices connected on the CAN bus. For example: to power a slave Indu Vertical Speed Indicator you can connect it to your Indu Altimeter via CAN bus.

Altimeters equipped with backup battery have slightly different CAN bus connectors. In this case only one connector provides output power, while the second one does not. Connector that provides power is marked with red CAN label. A device connected to this connector will also get backup power from Indu Altimeter in the case of main power bus failure. This backup power is limited to 150 mA at 12 V, which typically allows connection of one other Indu instrument.

2.2.3 Illumination

LCD display brightness level can be adjusted. Here are two options: new instruments have a push-rotate knob, while older instruments have only rotating knob. When Indu Altimeter is connected to the CAN bus, the knob adjusts brightness of all instruments connected to the bus.

On instruments with a push knob, simply push the knob, adjust the brightness and push the knob once more.

For instruments with only rotation knob, an optional external illumination knob can be connected to the back of the instrument. Illumination knob part number is I-ALT-ILLUM and it must be ordered separately. Please refer also to section 3.4 on page 19 for the activation procedure.

2.2.4 Power - `POWER`

Connect supplied connector at the back of Indu Altimeter. The connector has a notch on one side, which protects from wrong orientation.

Connect blue lead to negative (ground) terminal and red lead to positive (+12-24 V) terminal.

2.2.5 Green 6-Pin Connector - Backup Battery

This connector is used only with the backup battery option. Out of 6 pins, only pin 1 and pin 2 are in use and pins 3-6 are not used.

When pins 1 and 2 are connected together (shorted), then the backup battery circuit is active. Please refer to section 7.4 on page 25 for more details.

3 Adjustments

The QNH knob is used to perform some adjustments of Indu Altimeter. In fact, this knob may be also used to adjust IAS, when such instrument is connected to the CAN bus.

3.1 Altitude Adjustment - Static Sensor Offset

1020 → 999 → 1013 for hPa or 30.12 → 29.50 → 29.91 for inHg.

A minor sensor offset may be required in order to adjust Indu Altimeter according to some other reference instrument. Please, follow the steps given below in order to make the adjustment. A precise reference instrument is needed in this procedure.

1. Set both the reference instrument and Indu Altimeter to 1013 hPa and compare the readings. Write down the altitude shown by the reference.

2. Turn the knob on Indu Altimeter to indicate 1020 hPa (30.12 inHg) and wait for about 3 seconds for a short cyan line to appear on the top of LCD display.

3. Quickly turn the knob to indicate 999 hPa (29.50 inHg). A moment later a longer cyan line appears on the top. You must reach 999 hPa before cyan line disappears.

4. Turn the knob to select 1013 hPa (29.91 inHg) and wait for a moment. Again, you have to reach this value before cyan line disappears.

5. Now a full cyan line appears and the LCD display is slightly altered. It shows the offset and the altitude. Turn the knob until Indu Altimeter shows the same altitude as the reference altimeter. Wait for cyan line to disappear.

   This completes the sensor offset procedure.

3.2 Airspeed Adjustment - Auto Zero

1020 → 1030 → 1013 for hPa or 30.12 → 30.42 → 29.91 for inHg.

In special situations, when altimeter and airspeed indicator are connected with the CAN bus, you can use altimeter to issue zero calibration command on the airspeed indicator. Normaly, this is not needed. You should issue this command only, if airspeed indicator shows significant offset during pitostatic test.

When airspeed indicator receives such command, it changes offset of the internal pressure sensor so that it shows true zero afterwards.

Important: Please make sure that aeroplane is either inside hangar or there is absolutely no wind and that pitot tube is not covered. Failing to do so may result in wrong offset and it may worsen airspeed precision.

The procedure is as follows:

1. Turn QNH until it shows 1020 hPa (30.12 inHg) and wait for about three seconds for a short cyan line to appear on top of LCD display.

2. Quickly turn the knob to indicate 1030 hPa (30.42 inHg). A moment later a longer cyan line appears.

3. Turn the knob to 1013 hPa (29.91 inHg) to complete the procedure. Cyan line disappears and no other visual feedback is shown on either indicator.

3.3 Toggle QNH hPa – inHg

1020 → 1025 → 1013 for hPa or 30.12 → 30.27 → 29.91 for inHg.

Part of the LCD display is also a QNH value. This value can be shown in hPa or in inHg units. You can change the units using next procedure:

1. Turn the knob until it shows 1020 hPa (30.12 inHg) and wait for about three seconds for a short cyan line to appear on top of LCD display.

2. Quickly turn the knob to indicate 1025 hPa (30.27 inHg). A moment later a longer cyan line appears.

3. Turn the knob to 1013 hPa (29.91 inHg) to complete the procedure. Observe the units and values next to QNH. They changed from hPa to inHg and vice versa.

3.4 Toggle Illumination Knob

1020 → 1035 → 1013 for hPa or 30.12 → 30.56 → 29.91 for inHg.

This section applies only to instruments without push/rotate knob.

If the external illumination knob does not work – screen does not react on the knob, try the following procedure. This procedure enables remote illumination knob if it was not enabled or disables illumination knob, if it was enabled.

1. Turn QNH until it shows 1020 hPa (30.12 inHg) and wait for about three seconds for a short cyan line to appear on top of LCD display.
2. Quickly turn the knob to indicate 1035 hPa (30.56 inHg). A moment later a longer cyan line appears.
3. Turn the knob to 1013 hPa (29.91 inHg) to complete the procedure.
4. Finally, you need to turn off Indu Altimeter and then back on in order to activate the change.

4 Maintenance & Repair

No special maintenance is required.

The instrument has no serviceable parts inside. In the case of malfunction, it must be sent to factory for a repair.

Altimeters equipped with backup battery must undergo battery capacity check annually. The procedure is described in section 7.3.

5 Troubleshooting

5.1 Freeze During Engine Start

In certain aircraft installations instrument freezes and then reboots itself, when some large current consumers are switched on. This is caused by a very short voltage drop as a consequence of the consumer's power demand.

A simple electronic circuit illustrated in Figure 6 may help in this case. The circuit consist of two elements.

- The diode prevents reverse flow from the capacitor. We recommend Schottky Diode 1N5818G. You can also use some other diode, which has a low voltage drop, 1 A forward current and at least 20 V of blocking voltage.
- The capacitor serves for a very short energy reserve. Use an aluminium electrolytic capacitor with about 1000 µF, at least 25 V and at least 100 °C working temperature.

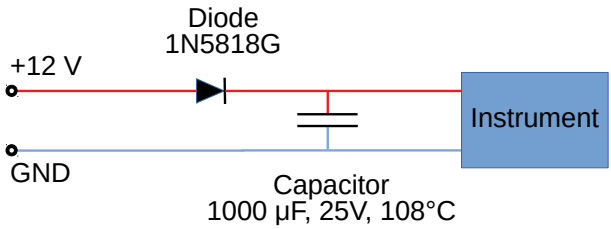

Figure 6: Circuit that may prevent sudden voltage drops in certain installations.

6 Sensor Calibration & Altitude Calculation

6.1 Calibration Procedure

Each unit is factory calibrated against reference barometer at different pressure points. In standard calibration range we calibrate in following pressure sequence: 1100, 1000, 900, 800, 700, 600, 500, 400, 280, 550, 650, 750, 850, 950 and 1050 hPa. These measurements are then repeated at different temperatures ranging from -10 to 60 °C in 7 °C steps.

Please note that FAA Part 43, Appendix E does not require calibration/verification at different temperatures. But temperature calibration is essential for any electronic sensor.

This means that each instrument is calibrated against $13 \cdot 11 = 143$ different temperature - pressure pairs. The least squares method is then applied on this results in order to obtain corrections coefficients. A two dimensional, third degree polynomial is used for the correction model.

You can't change calibration parameters, but you can adjust the altitude. Please refer to the section 3.1 for more details.

6.2 Pressure Altitude Calculation

Pressure altitude is calculated according to the ISA 1976 model of athmosphere. First two athmosphere layers are used; throposphere and thropopause. The throposphere is modeled by equation (1) up to 11000 meters of geopotential altitude. The thropopause layer is modeled by equation (2) up to 20000 meters of geopotential altitude.

As the pressure sensor is calibrated down to 100 hPa (about 16000 meters) altitudes above 16000 meters are not reliable.

$$p = p_0 \left[\frac{T_0 + T_0' \cdot z}{T_0} \right]^{\frac{-g_0}{RT_0'}} \tag{1}$$

$$p = p_1 \exp \left[-\frac{g_0(z - z_1)}{RT_1} \right] \tag{2}$$

The equations converts geopotential altitude into pressure. Here z means geopotential altitude, $g_0 = 9.806645$ m/s^2 is gravity constant, $R = 287.0528$ N $\cdot$ m/kg $\cdot$ K. is gas constant for dry air, $p_0 = 1013.25$ hPa is standard pressure at sea level, $p_1 = 226.321$ hPa is standard pressure at troposphere/thropopause limit, $z1 = 11000$ m is geopotential altitude of the limit, $T_0 = 288.15$ K is temperature at sea level, $T_1 = 216.65$ K is temperature at limit and $T_0' = -0.0065$ K/m is temperature gradient in troposphere.

Besides the equations given below, their inverse and derivatives of inverse are also used.

6.3 Altitude Derivative

Altitude calculated from pressure is numerically derived to get rate of altitude change – vertical speed. The derivative is mathematically correct and as such does not introduce any error. We are using multiple point numerical derivation.

7 Backup Battery

Some Indu Altimeters are quipped with an integrated backup battery. The battery provides backup power in the case when main power bus fails.

7.1 Symbols

The following symbols are used to indicate the status of the backup system. The symbols are visible in top right corner of the LCD display.

- err — Backup battery system failure. Altimeter may work as long as the main power bus is working, but backup battery will not work. The symbol is flushing.
- Altimeter is running on backup battery. Less then 10% capacity is available. Altimeter can shut off anytime. The symbol is flushing.
- Altimeter is running on backup battery. Less then 30% capacity is available.
- Altimeter is running on backup battery. Less then 70% capacity is available.
- Altimeter is running on backup battery. Between 70% – 100% capacity is available.
- A flashing arrow indicates that the backup battery is being charged. Capacity symbols are the same as above.
- Small green rectangle - battery is fully charged and it is in stand-by mode.

7.2 Normal Operation

Upon switching on the system bus and backup battery circuit (see also section 7.4) Indu Altimeter first performs initial checks. Next, it goes into charging mode. In most cases backup battery is already full and charger will shut off in a few minutes. After this, small green rectangle will be indicating that backup system is in stand-by.

7.3 Capacity Test

In order to verify capacity of the backup battery, please follow the following procedure.

1. Run Indu Altimeter on the system bus until the battery is fully charged – wait until the small green rectangle appears on the screen. This indicates that battery was fully charged.
2. Disconnect the system bus, so that Altimeter (and perhaps some other instrument like Indu Airspeed Indicator) is now running only on backup battery. The battery symbol must appear.
3. Start measuring time.
4. If the instrument is still running after 30 minutes, then the capacity of the backup battery is still sufficient. If you do not reach 30 minutes, the battery must be replaced.
5. You can stop measuring when you reach 30 minutes.

Indu Altimeter has internal protection, which will disconnect the battery once the voltage in the battery is critical low. This prevents permanent damage of the battery.

A completely depleted battery should recharge in about 2.5 hours.

7.4 Connection Schematics

The backup battery version of Indu Altimeter has two independent circuits. The first circuit connects the instrument with the system bus while the second circuit is used to switch the backup battery on/off.

This gives the following combinations:

Sys. Bus	Backup	Result
Off	Off	Altimeter is switched off.
On	On	Normal operation.
Off	On	Altimeter works on backup battery only.
On	Off	Altimeter works on system bus. Battery system error symbol appears because backup is not available.

Table 3: Possible backup battery switch combinations.

7.4.1 Solution With One Switch

This option is recommended. Here a single DPST switch is used. This switch allows you to activate two independent circuits. When switch is on, it simultaneously connects Indu Altimeter with the system bus and activates the backup system. When the switch is off, both circuits are disconnected. This gives you cases 1 and 2 from Table 3.

When master is off and this switch is on, the instrument will run on backup only (case 3). This combination can be used to perform the capacity test.

Important: Use a switch with 1 A DC rating or more.

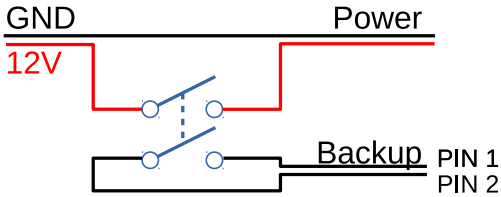

Figure 7: Connection solution with one switch controlling two circuits.

7.4.2 Solution with Two Switches

In this case you are using two independent SPST switches. They allow you to get all four combinations from the table above.

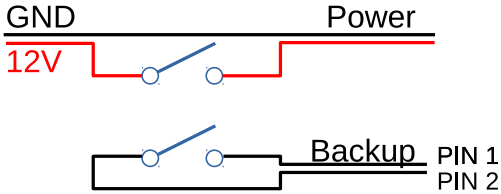

Figure 8: Connection solution with two switches.

7.5 CAN Bus Power Schematics

Each Indu Altimeter has two CAN bus connectors at the back. In the case of backup battery, only one connector provides backup power to other connected instruments. The power is limited to 150 mA at 12V (1.8 W).

Typically, Indu Airspeed Indicator is protected with the backup battery from Indu Altimeter. Connection schematic for such case is shown in Figure 9 on page 27.

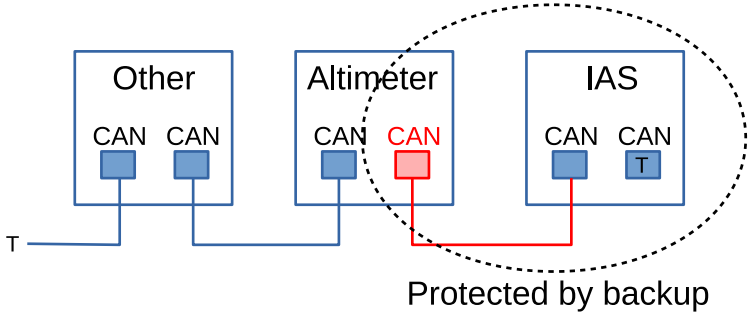

Figure 9: CAN bus power protection example. Only part connected to the red connector is protected. The other (blue) part will shut off when system bus fails.

8 Slave Version

A slave version of Indu Altimeter also exists. The slave version does not have its own sensors and depends on some external master device. The master and slave devices must be connected with CAN bus. The slave must get all information from the CAN bus. If any of the information is missing a red cross will appear on the LCD display over the part for which the information is missing.

In the case of slave Altimeter, one of the following devices can be used as master: Horis, Emsis PFD, Aetos PFD, Nesis PFD, Indu Combo and standard Indu Altimeter.

For the reasons mentioned above, the following parts of this manual do not apply for the slave Altimeter.

- 3.1 Altitude Adjustment.
- 3.2 Airspeed Adjustment - Auto Zero.
- 6 Sensor Calibration.
- 7 Backup Battery.

Please refer to the master device manual for more details about pressure sensor adjustment.

9 Limited Conditions

Although a great care was taken during the design, production, storage and handling, it may happen that the Product will be defective in some way. Please read the following sections about the warranty and the limited operation to get more information about the subject.

9.1 Warranty

Kanardia d.o.o. warrants the Product manufactured by it against defects in material and workmanship for a period of twenty-four (24) months from retail purchase.

Warranty Coverage

Kanardia's warranty obligations are limited to the terms set forth below:

Kanardia d.o.o. warrants the Kanardia-branded hardware product will conform to the published specification when under normal use for a period of twenty-four months (24) from the date of retail purchase by the original end-user purchaser ("Warranty Period"). If a hardware defect arises and a valid claim is received within the Warranty Period, at its option and as the sole and exclusive remedy available to Purchaser, Kanardia will either (1) repair the hardware defect at no charge, using new or refurbished replacement parts, or (2) exchange the product with a product that is new or which has been manufactured from new or serviceable used parts and is at least functionally equivalent to the original product, or, at its option, if (1)

or (2) is not possible (as determined by Kanardia in its sole discretion), (3) refund the purchase price of the product. When a refund is given, the product for which the refund is provided must be returned to Kanardia and becomes Kanardia's property.

Exclusions and Limitations

This Limited Warranty applies only to hardware products manufactured by or for Kanardia that have the "Kanardia" trademark, trade name, or logo affixed to them at the time of manufacture by Kanardia. The Limited Warranty does not apply to any non-Kanardia hardware products or any software, even if packaged or sold with Kanardia hardware. Manufacturers, suppliers, or publishers, other than Kanardia, may provide their own warranties to the Purchaser, but Kanardia and its distributors provide their products *AS IS*, without warranty of any kind.

Software distributed by Kanardia (with or without the Kanardia's brand name including, but not limited to system software) is not covered under this Limited Warranty. Refer to the licensing agreement accompanying such software for details of your rights with respect to its use.

This warranty does not apply: (a) to damage caused by use with non-Kanardia products; (b) to damage caused by accident, abuse, misuse, flood, fire, earthquake or other external causes; (c) to damage caused by operating the product outside the permitted or intended uses described by Kanardia; (d) to damage caused by service (including upgrades and expansions) performed by anyone who is not a representative of Kanardia or an Kanardia Authorized Reseller; (e) to a product or part that has been modified to significantly alter functionality or capability without the written permission of Kanardia; (f) to consumable parts, such as batteries, unless damage has occurred

due to a defect in materials or workmanship; or (g) if any Kanardia serial number has been removed, altered or defaced.

To the extent permitted by applicable law, this warranty and remedies set forth above are exclusive and in lieu of all other warranties, remedies and conditions, whether oral or written, statutory, express or implied, including, without limitation, warranties of merchantability, fitness for a particular purpose, non-infringement, and any warranties against hidden or latent defects. If Kanardia cannot lawfully disclaim statutory or implied warranties then to the extent permitted by law, all such warranties shall be limited in duration to the duration of this express warranty and to repair or replacement service as determined by Kanardia in its sole discretion. Kanardia does not warrant that the operation of the product will be uninterrupted or error-free. Kanardia is not responsible for damage arising from failure to follow instructions relating to the product's use. No Kanardia reseller, agent, or employee is authorized to make any modification, extension, or addition to this warranty, and if any of the foregoing are made, they are void with respect to Kanardia.

Limitation of Liability

To the extent permitted by applicable law, Kanardia is not responsible for indirect, special, incidental or consequential damages resulting from any breach of warranty or condition, or under any other legal theory, including but not limited to loss of use; loss of revenue; loss of actual or anticipated profits (including loss of profits on contracts); loss of the use of money; loss of anticipated savings; loss of business; loss of opportunity; loss of goodwill; loss of reputation; loss of, damage to or corruption of data; or any other loss or damage howsoever caused including the replacement of equipment and property, any costs of recovering, programming, or reproducing any program or data stored or used with Kanardia products and any failure to

maintain the confidentiality of data stored on the product. Under no circumstances will Kanardia be liable for the provision of substitute goods or services. Kanardia disclaims any representation that it will be able to repair any product under this warranty or make a product exchange without risk to or loss of the programs or data. Some jurisdictions do not allow for the limitation of liability for personal injury, or of incidental or consequential damages, so this limitation may not apply to you.

9.2 TSO Information — Limited Operation

This product is not TSO approved as a flight instrument. Therefore, the manufacturer will not be held responsible for any damage caused by its use. The Kanardia is not responsible for any possible damage or destruction of any part on the airplane caused by default operation of instrument.